尺寸圖 DIMENSIONAL DRAWINGS

TDNC-255

Unit: mm

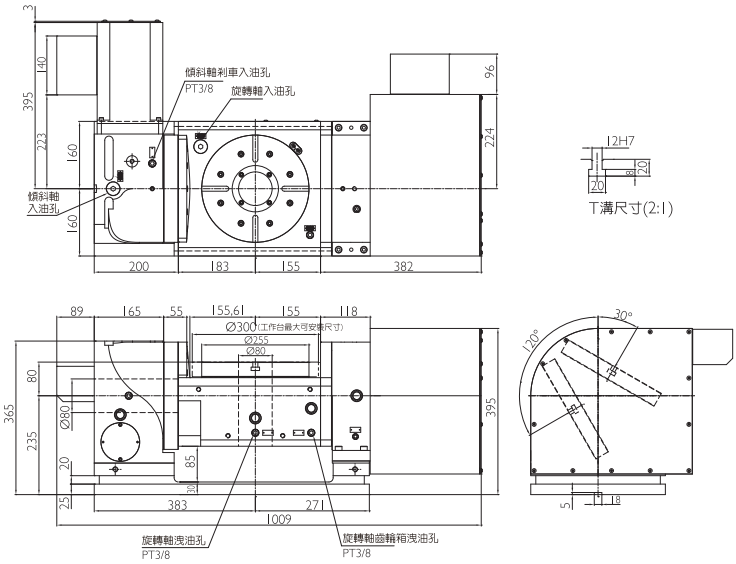

TDNC-255L

Unit: mm

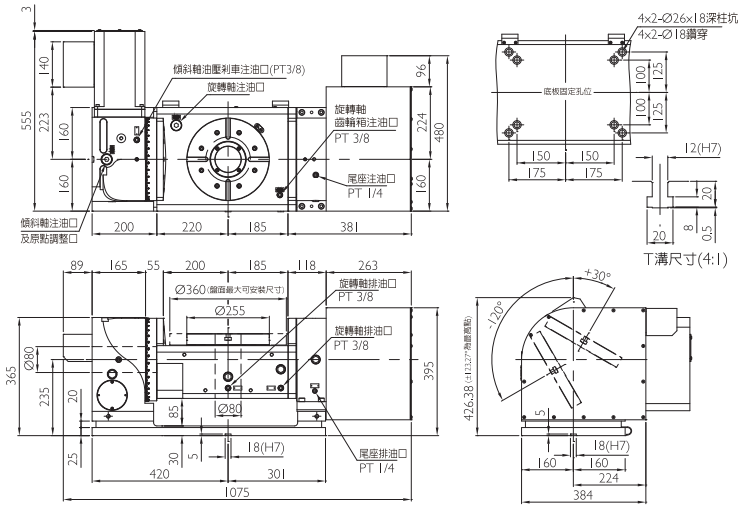

TDNC-350
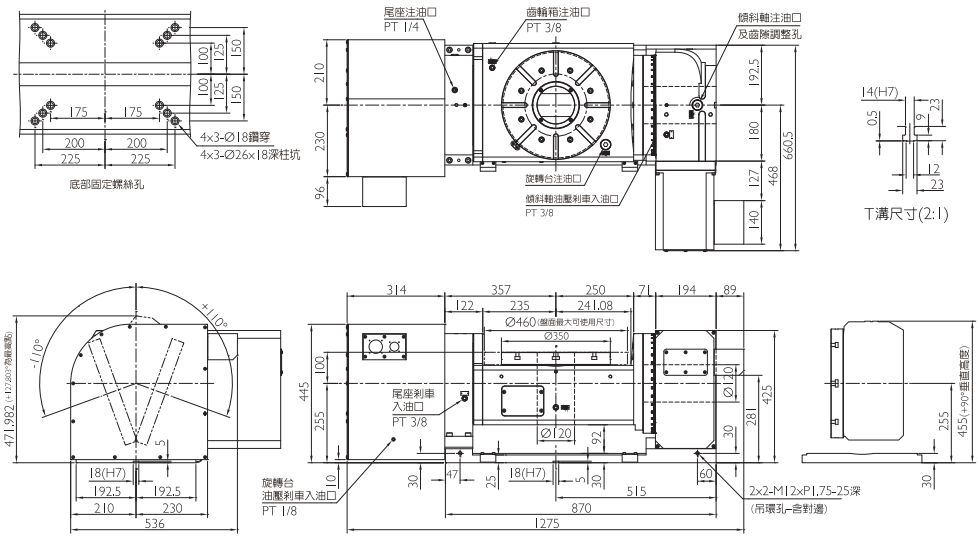
Unit: mm