尺寸圖 DIMENSIONAL DRAWINGS

DNC-170B

Unit: mm

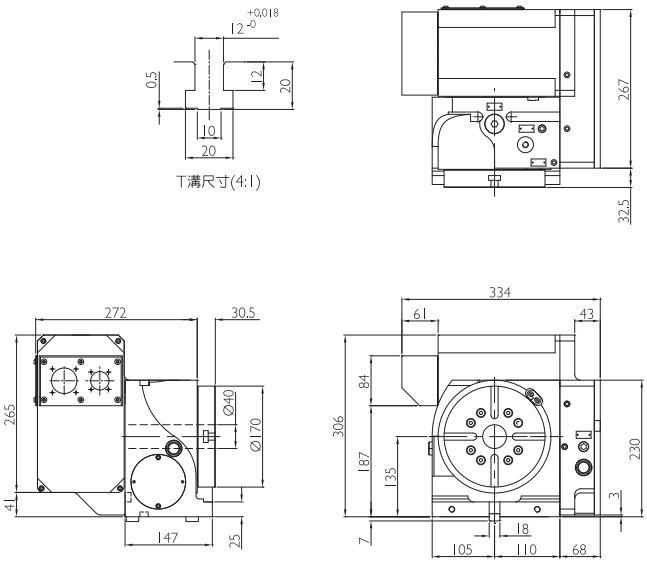

DNC-210B

Unit: mm

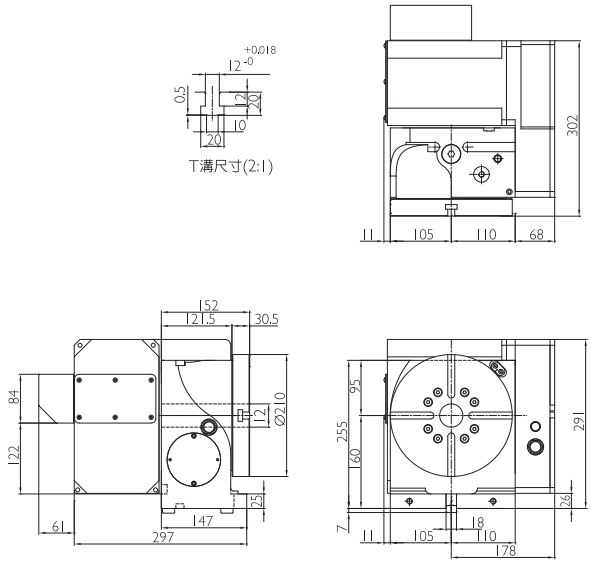

DNC-250B

Unit: mm

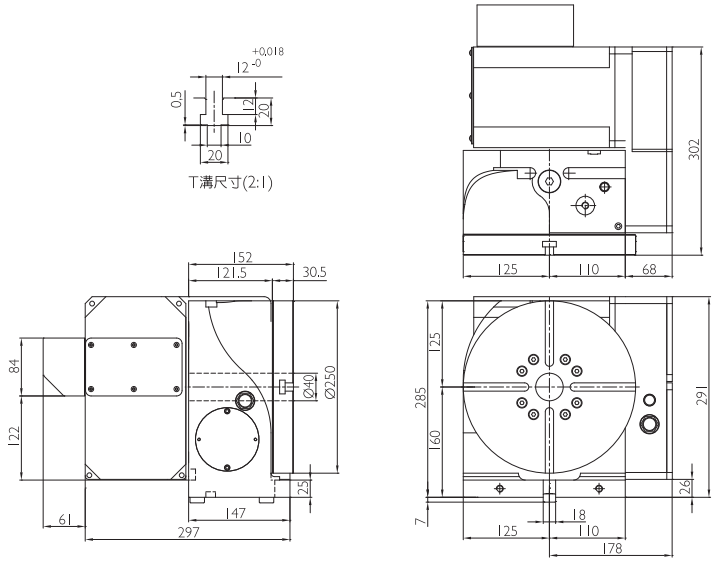

DNC-255B
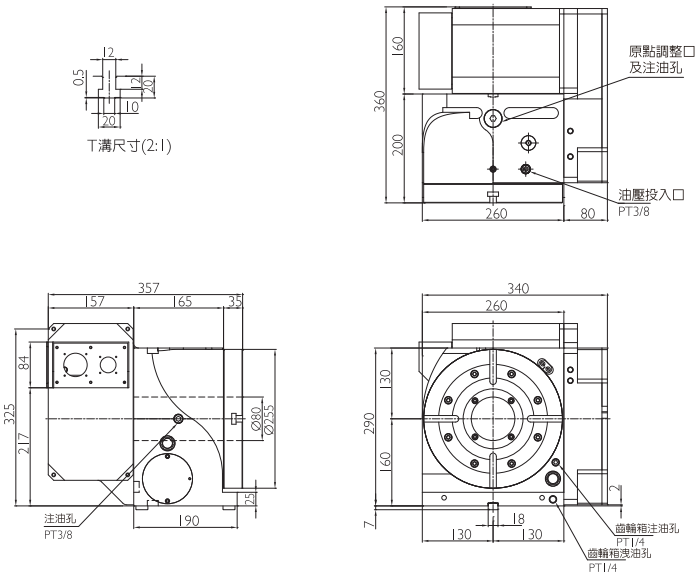
Unit: mm